HTP Specifications

4” Through 16”

PRESSURE/TEMPERATURE LIMITS

Maximum Operating Pressure

@ 100°F ------ 1480PSI / 102bar

Maximum Operating Temperature

@ 900°F / 482°C ------ 687PSI / 47.4bar

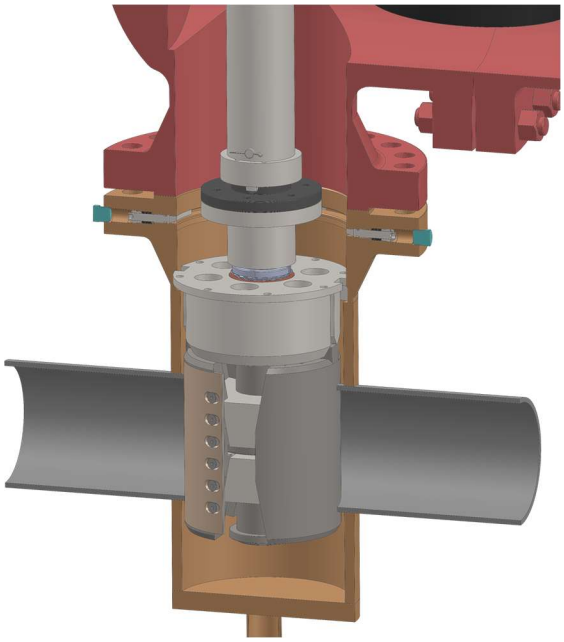

Function	Rating/Operating Dimensions
Maximum Operating Pressure	1480 PSI / 102bar @ 100°F / 37.7°C
Maximum Operating Temperature	900°F / 482°C @ 687PSI / 47.7bar
Maximum Test Pressure	1480 PSI with 600# Flange
Normal HTP Range	600# and 900#
Size Range	4” – 16”
Attaching Flange	
RTJ	4” 600# RTJ and 6” 600# RTJ
RTJ	6” 900#
Attaching Flange Bolt Size	
RTJ 4” 600#	7/8”- 9 x 3-½”
RTJ 6” 600#	
Flat Faced RTJ Flange	1”-8 x 3-½”
Raced Face RTJ Flange	1”-8 x 4”
RTJ 6” 900#	1 1/8” x 8 3/16” when using the cooling spool
RTJ Gasket Size	R 37 for 4” 600# R 45 for 6” 600# and 6” 900#
Boring Bar Diameter	2 ½” for 8” and below 4” and 4 ½” for 8” to 16”

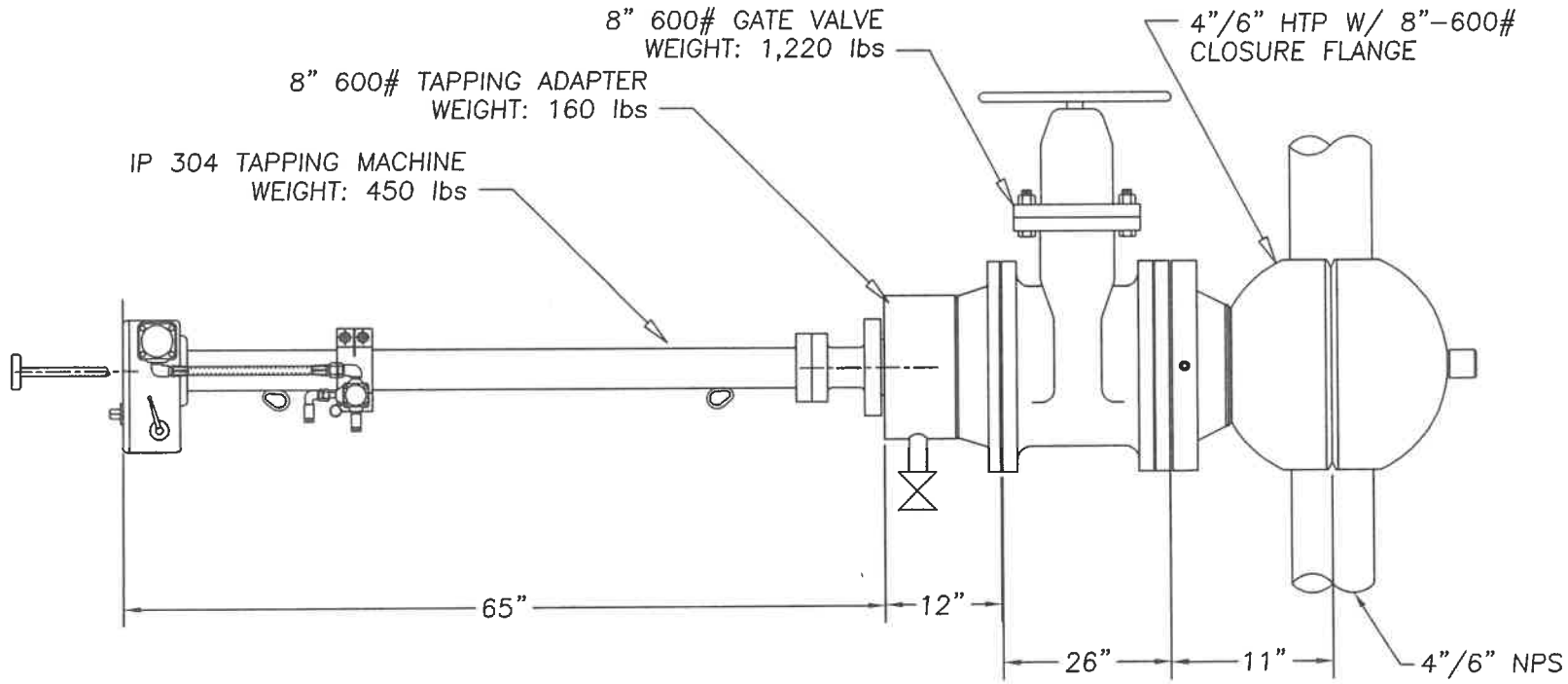

DIMENSIONAL INFORMATION ARE ESTIMATES AND SUBJECT TO SPECIFIC APPLICATIONS AND AVAILABILITY OF EQUIPMENT AT TIME OF PROJECT

ECN#	MARK	REVISION	BY	DATE

TEAM

S

TITLE: GENERAL DIMENSIONS, 4"/6"-HTP SHPERICAL FITTING EQUIPMENT LAYOUT

GENERAL FINISH 125

TOLERANCE UNLESS OTHERWISE SPECIFIED
1 PLC DEC ±0.031
2 PLC DEC ±0.015
3 PLC DEC ±0.005
FRACTION ±1/4
ANGULAR ±1°

DATE: 07/29/11
MATERIAL: —
SCALE: NONE
QTY. REQUIRED: —
DRAWN BY: MMY
APPROVED BY:
DRAWING NUMBER: HMI1107188-DWG-14

This drawing is the property of TUPMANITE and is not to be used except as expressly authorized by this company. Copies are not to be made without permission.

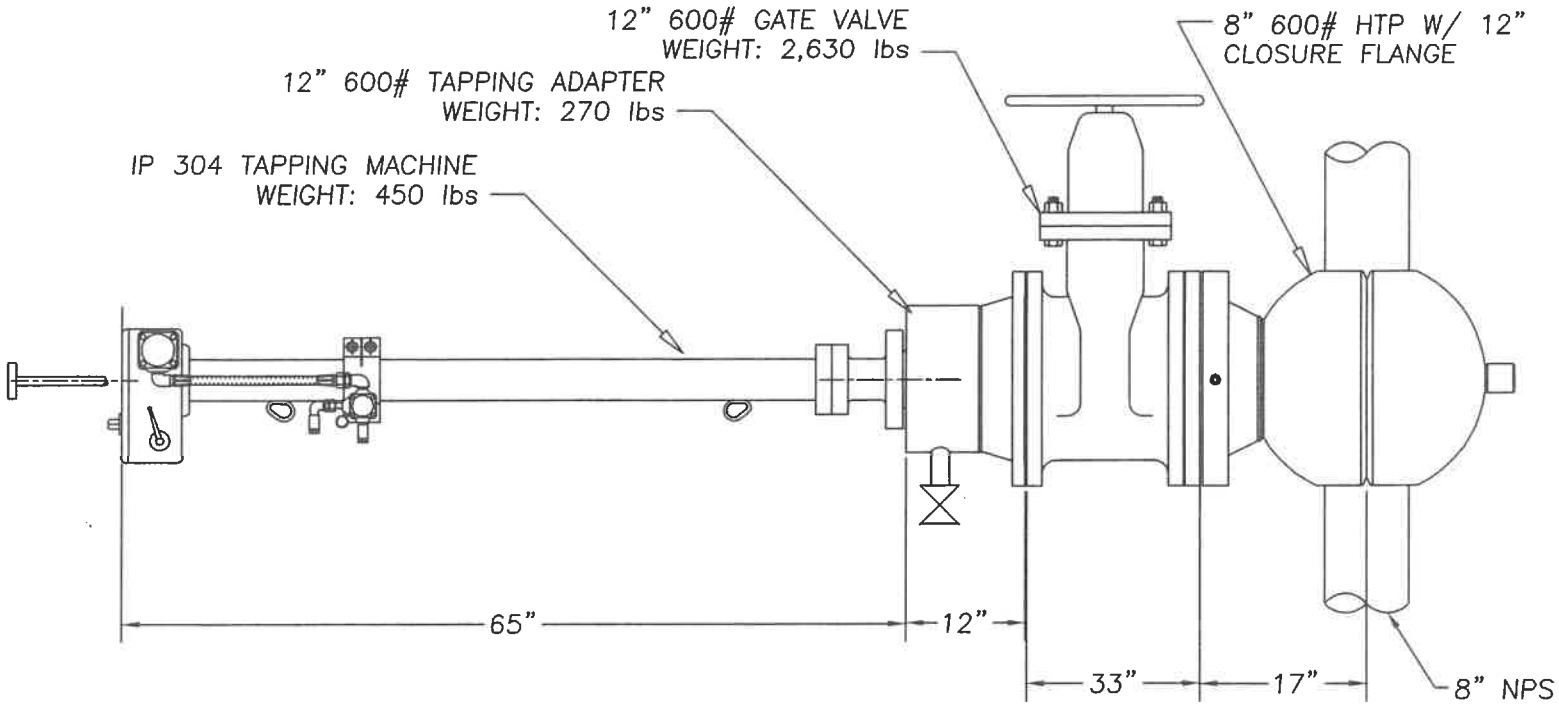

DIMENSIONAL INFORMATION ARE ESTIMATES AND SUBJECT TO SPECIFIC APPLICATIONS AND AVAILABILITY OF EQUIPMENT AT TIME OF PROJECT

ECN#	MARK	REVISION	BY	DATE

TEAM

S

TITLE: GENERAL DIMENSIONS, 8"–HTP SHPERICAL FITTING EQUIPMENT LAYOUT

GENERAL FINISH 125√

TOLERANCE UNLESS OTHERWISE SPECIFIED
1 PLC DEC ±0.031
2 PLC DEC ±0.015
3 PLC DEC ±0.005
FRACTION ±1/4
ANGULAR ±1°

DATE: 07/29/11
MATERIAL: —
SCALE: NONE
QTY. REQUIRED: —
DRAWN BY: MMY
APPROVED BY:
DRAWING NUMBER: HMI1107188–DWG–15

This drawing is the property of FURMANITE and is not to be used except as expressly authorized by this company. Copies are not to be made without permission.

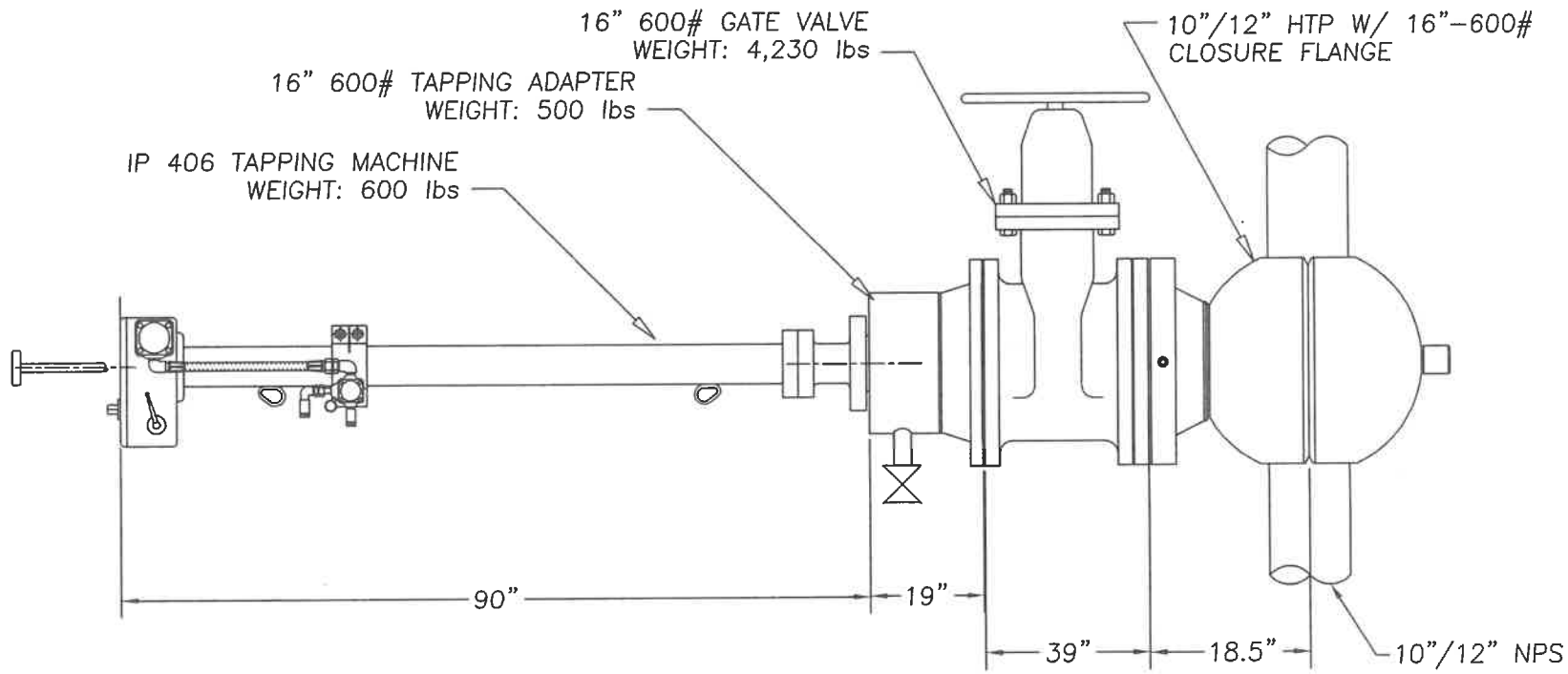

DIMENSIONAL INFORMATION ARE ESTIMATES AND SUBJECT TO SPECIFIC APPLICATIONS AND AVAILABILITY OF EQUIPMENT AT TIME OF PROJECT

ECN#	MARK	REVISION	BY	DATE

TEAM

TITLE: GENERAL DIMENSIONS, 10"/12"-HTP SHPERICAL FITTING EQUIPMENT LAYOUT

GENERAL FINISH 125

TOLERANCE UNLESS OTHERWISE SPECIFIED
1 PLC DEC ±0.031
2 PLC DEC ±0.015
3 PLC DEC ±0.005
FRACTION ±1/4
ANGULAR ±1°

DATE: 07/29/11
SCALE: NONE
DRAWN BY: MMY
MATERIAL: —
QTY. REQUIRED: —
APPROVED BY:
DRAWING NUMBER: HMI1107188-DWG-16

This drawing is the property of FURMANITE and is not to be used except as expressly authorized by this company. Copies are not to be made without permission.

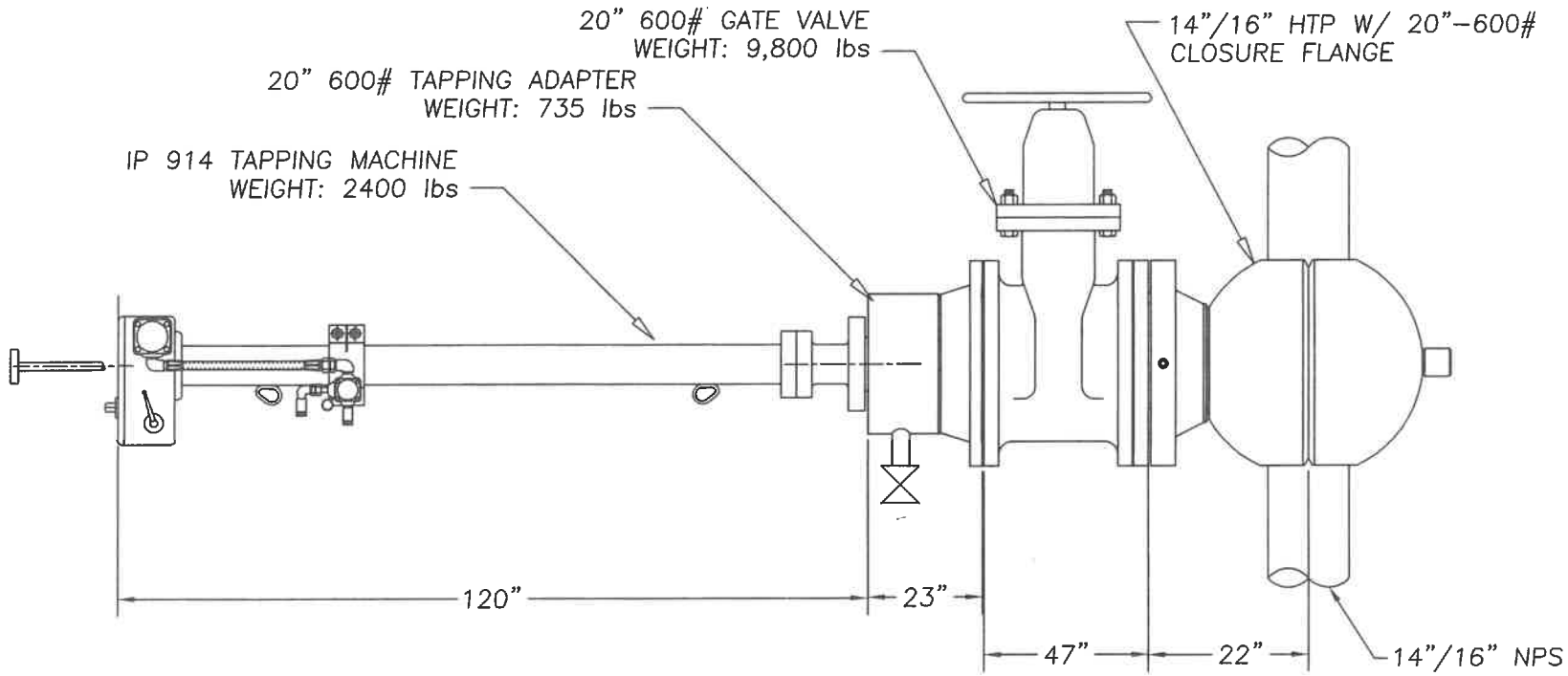

DIMENSIONAL INFORMATION ARE ESTIMATES AND SUBJECT TO SPECIFIC APPLICATIONS AND AVAILABILITY OF EQUIPMENT AT TIME OF PROJECT

ECN#	MARK	REVISION	BY	DATE

TEAM

S

TITLE: GENERAL DIMENSIONS, 14"/16"-HTP SHPERICAL FITTING EQUIPMENT LAYOUT

GENERAL FINISH 125√

TOLERANCE UNLESS OTHERWISE SPECIFIED
1 PLC DEC ±0.031
2 PLC DEC ±0.015
3 PLC DEC ±0.005
FRACTION ±1/4
ANGULAR ±1°

DATE: 07/29/11
SCALE: NONE
DRAWN BY: MMY
MATERIAL: —
QTY. REQUIRED: —
APPROVED BY:
DRAWING NUMBER: HMI1107188-DWG-17

This drawing is the property of FURMANITE and is not to be used except as expressly authorized by this company. Copies are not to be made without permission.